Customer:	Customer Model:	Customer Approve By:	REV.	DESCRIPTION OF MODIFY	DATE

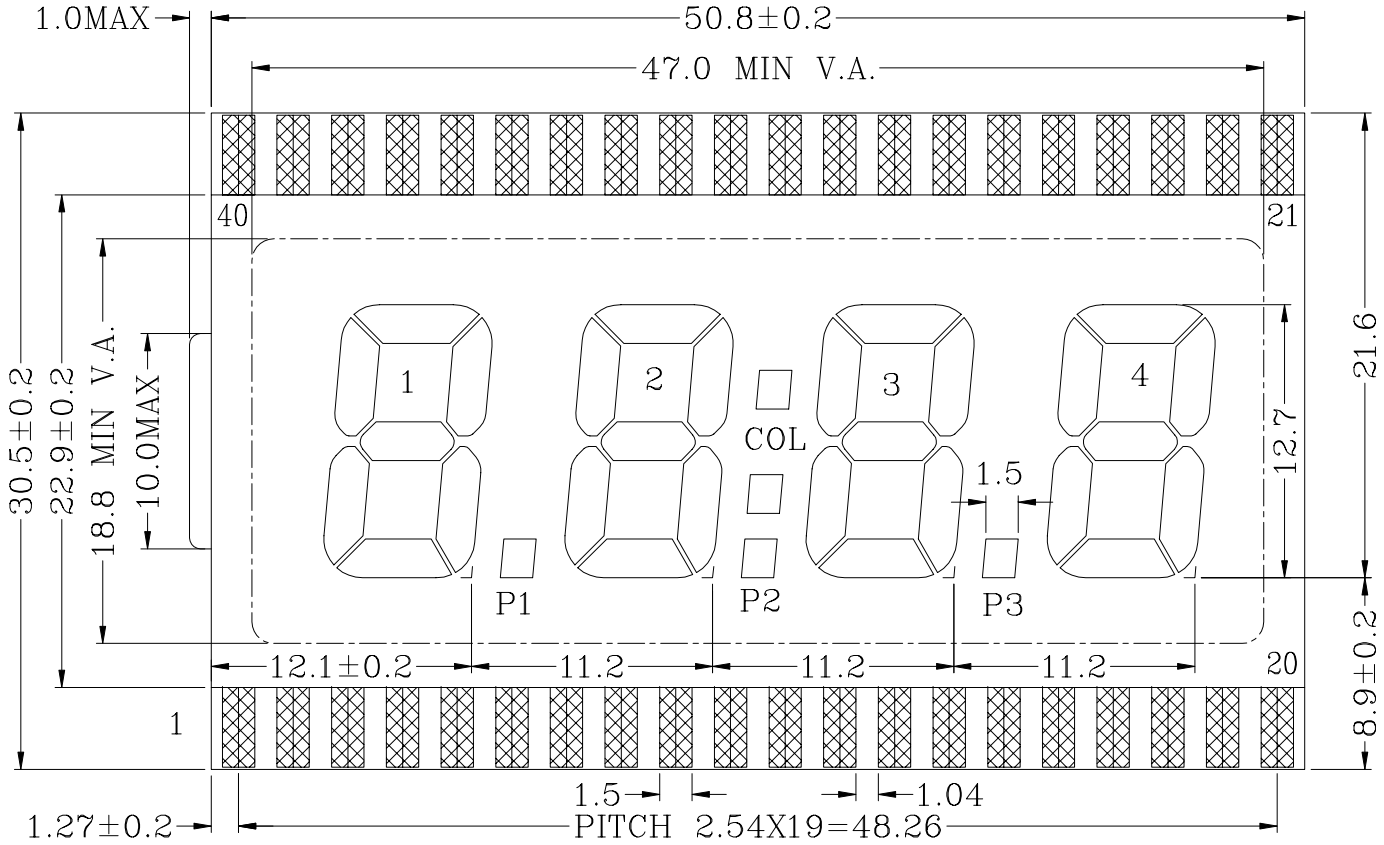

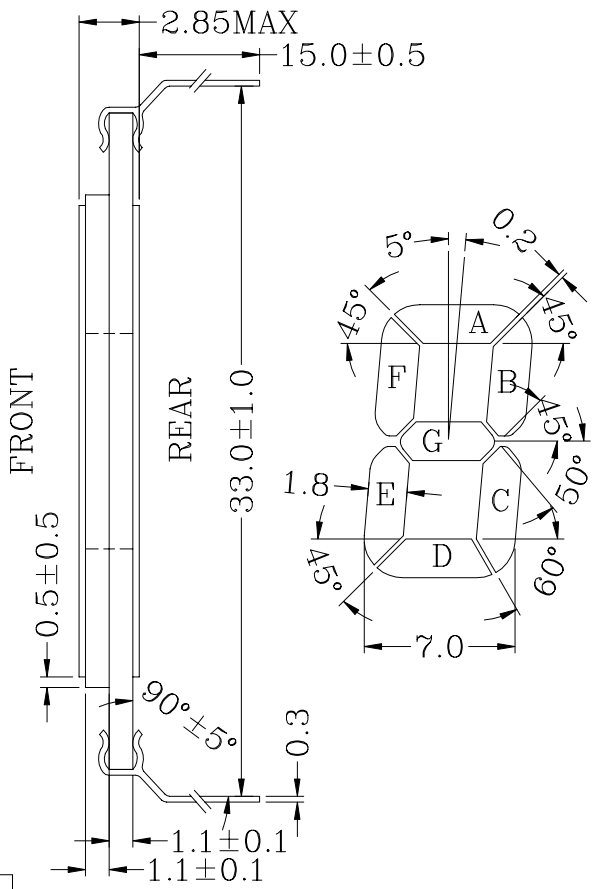

PIN	1	2	3	4	5	6	7	8	9	10	11	12	13	14	15	16	17	18	19	20
COM	COM	NC	NC	NC	1E	1D	1C	P1	2E	2D	2C	P2	3E	3D	3C	P3	4E	4D	4C	4B
PIN	21	22	23	24	25	26	27	28	29	30	31	32	33	34	35	36	37	38	39	40
COM	4A	4F	4G	3B	3A	3F	3G	COL	2B	2A	2F	2G	NC	1B	1A	1F	1G	NC	NC	COM

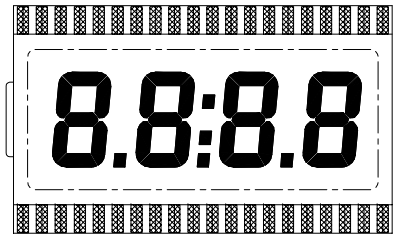

SCALE 1:1

DISPLAY TYPE : TN,POSITIVE MODE
POLARIZER MODE : TRANSFLECTIVE
CONNECTOR : PIN
VIEW ANGLE : 6 O'CLOCK
MULTIPLEX : STATIC
BIAS RATIO : --
DISPLAY DRIVER : --
OPERATING VOLTAGE : 5.0 V
OPERATING TEMP : -30°C TO +80°C
STORAGE TEMP : -35°C TO +85°C

DRAWN BY :	Katherine Jun-16-2003	海南清华显示器科技开发有限公司 HAINAN QINGHUA LCD TECHNOLOGY DEVELOPMENT CO.,LTD	UNITS: MM
CHECKED BY :			TITIL: CUSTOMER LCD
		DWG NO. : HQ30076	REV: A0 / SHEET: 1 OF 1
			SIZE: A4 / SCALE: NTS